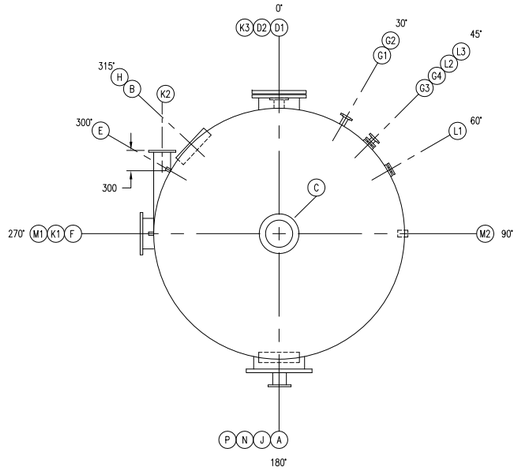

PLAN VIEW
(SEE NOTE #5)

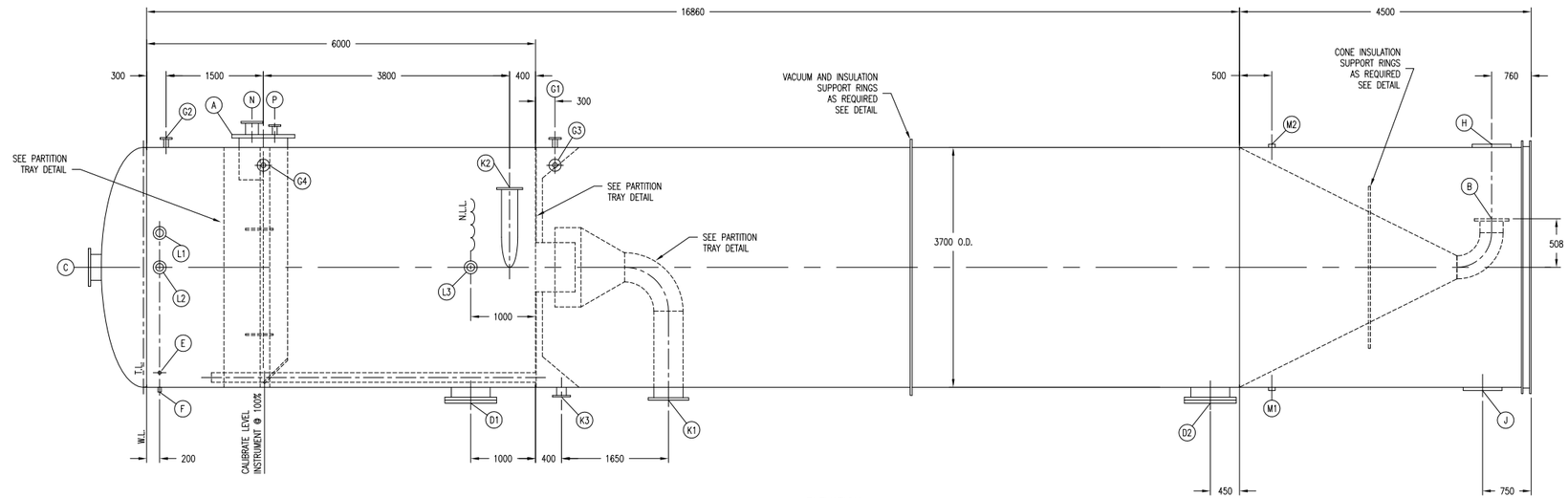

ELEVATION

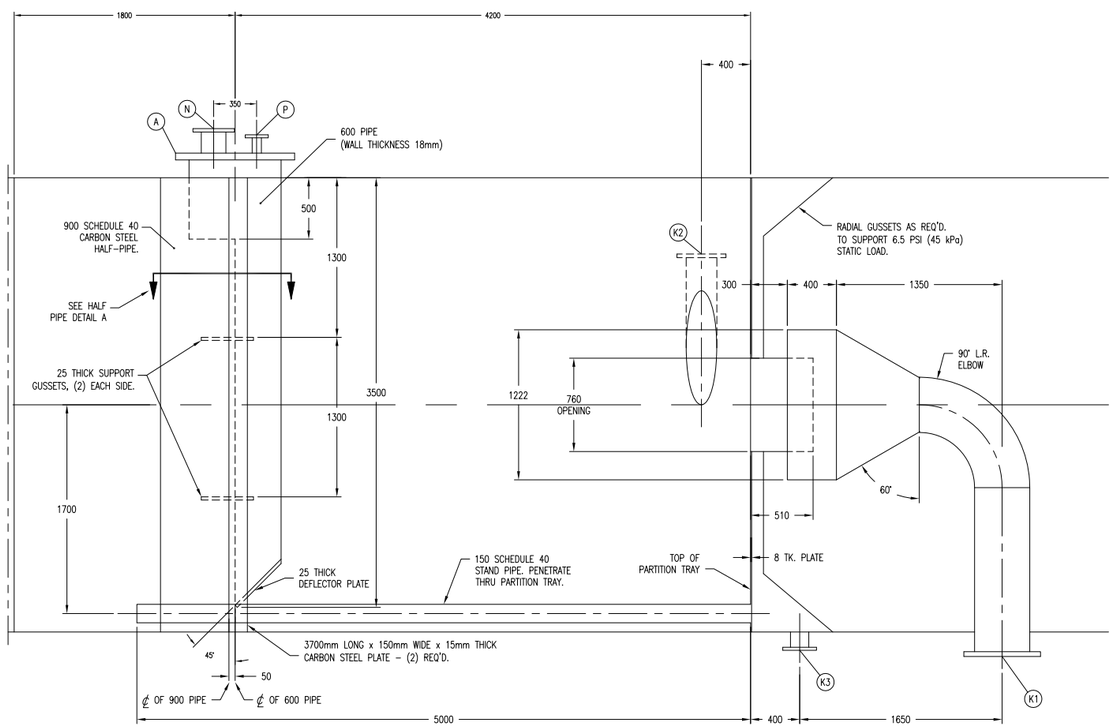

PARTITION TRAY DETAIL

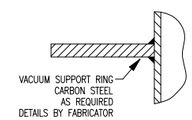

VACUUM SUPPORT DETAIL
(SEE NOTE #1)

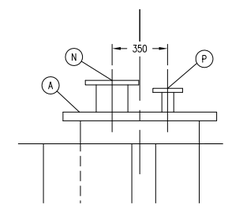

NOZZLE (A) DETAIL

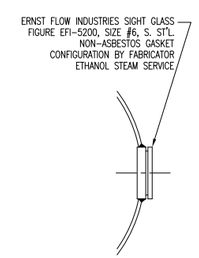

SIGHT GLASS DETAIL (L1)(L2)(L3)

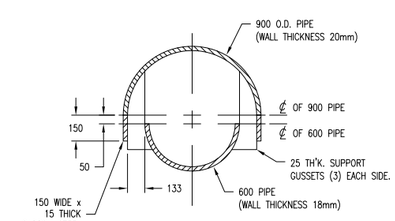

HALF PIPE DETAIL (A)

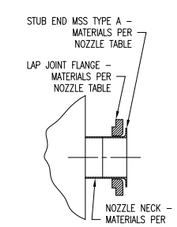

TYPICAL NOZZLE DETAIL
WHERE LAP JOINT FLANGES ARE CALLED FOR IN NOZZLE TABLE

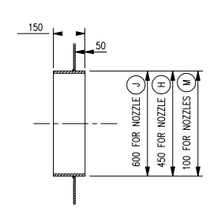

SKIRT PENETRATION DETAIL

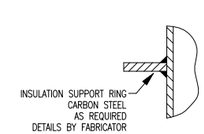

INSULATION SUPPORT DETAIL
(SEE NOTE #1)

NOZZLE SIZE	NOZZLE ** EXTENSION
1 1/4"–6"	150
8"–24"	200

** – UNLESS OTHERWISE SPECIFIED

SPECIFICATION – VESSEL

GENERAL

ITEM NO.: TK-307 SERVICE: LIQUEFACTION TANK
CODE: ASME SECTION VIII STAMP: ASME WELDING: ASME
RADIOGRAPH: SPOT STRESS RELIEVING: NO
DESIGN PRESSURE–PSIG (kPa): (SEE NOTE #3) TEMP.–°F (°C): 300 (149)
EST. WT. EMPTY–LB (kg) BY FABRICATOR FULL WATER: BY FABRICATOR OPERATING: BY FABRICATOR
WIND VEL.–MPH (km/HR): (SEE NOTE #11) EARTHQUAKE ZONE: BY OWNER

PROCESS DATA

FLUID: MASH APPROX. CAPACITY–GAL (L): 52,000 (196,800)
OPERATING PRESS.–PSIA (kPa): 8.4 (–43.4) TEMP.–°F (°C): 185 (85)
HOLD-UP TIME: 120 MINUTES
INLET RATE–GPM (m^3/HR): 305 (70) FLASH: 13,028 lb/hr (5,909 kg/hr)
NON-CONDENSIBLES: –

MATERIAL & THICKNESS–IN (mm)

SHELL: A516 GR. 60 CARBON STEEL
TOP HEAD: A516 GR. 60 CARBON STEEL ASME F&D
BOT. HEAD: A516 GR. 60 CARBON STEEL CONICAL
SUPPORTS: CARBON STEEL SKIRT
BOLTS: A193 B7 W/A194 2H HEX NUTS GASKETS: 2mm NON–ASBESTOS
NOZZLES: IN (mm)–COUPLINGS FOR 1" (25) & UNDER CONNECTIONS (UNLESS NOTED)
NECK: A106 GR. B CARBON STEEL PIPE – NOZZLE A TO BE SCH. 80
FLANGE: A105 FORGED STEEL 150# (1,000 kPa) LAP JOINT
COUPLING: A105 F–304L 3000# STAINLESS STEEL THREADED FULL
CORROSION ALLOWANCE: 1/8" (3mm)

NOZZLES

MARK	SERVICE	IN (mm) SIZE	NOTE
A	INLET	24"	SEE DETAIL A
B	OUTLET	10"	FLANGED
C	VENT	16"	FLANGED
D1,D2	MANWAY	24"	FLANGED W/BLIND COVER & DAWT – (2) REQ'D.
E	TEMP. CONN.	1"	COUPLING
F	PRESS. CONN.	1"	COUPLING
G1–G4	LEVEL CONN.	3"	FLANGED (SEE NOTE #4) (4) REQ'D.
H	PIPE THROUGH	18"	SEE DETAIL
J	ACCESS OPENING	24"	SEE DETAIL
K1	SUCTION 1	18"	FLANGED
K2	CIRCULATION	10"	FLANGED – TANGENTIAL
K3	CIRCULATION	6"	FLANGED
L1–L3	SIGHT GLASS	(120) I.D.	(3) REQ'D – SEE DETAIL
M1,M2	SKIRT VENT	4"	(2) REQ'D.
N	INLET	8"	FLANGED – SEE DETAIL A (SEE NOTE #7)
P	INLET	4"	FLANGED – SEE DETAIL A (SEE NOTE #8)

MISCELLANEOUS

LADDER: FABRICATOR TO PROVIDE LADDERS AND PLATFORMS.
PAINT: ALL EXTERNAL CARBON STEEL SURFACES TO BE CLEANED AND OTHERWISE PROPERLY PREPARED PRIOR TO APPLICATION OF ONE COAT OF CORROSION PROTECTION PRIMER PER SHOP STANDARD. FINAL PAINTING PER OWNER'S REQUIREMENTS.

NOTES:

1. FINAL LOCATION AND SIZING OF VACUUM AND INSULATION SUPPORT RINGS BY FABRICATOR.
2. STRUCTURAL BASE AND SUPPORTS BY FABRICATOR.
3. DESIGN PRESSURE: 30 PSIG (207 kPa) PLUS LIQUID FILL S.G.=1.07 AND FULL VACUUM.
4. LEVEL CONNECTIONS FOR EXTENDED DIAPHRAM TYPE DP TRANSMITTERS G1–G2 AND G3–G4 NOZZLES TO BE AT SAME ORIENTATION.
5. FINAL ORIENTATION TO BE DETERMINED UPON FINAL PIPING DESIGN.
6. INSTALL INSULATION CLIPS ON BOTTOM CONE.
7. 200mm SCH. 80 STUB END SHALL PENETRATE AND BE WELDED TO 600mm BLIND FLANGE COVER.
8. 100mm SCH. 80 STUB END SHALL PENETRATE AND BE WELDED TO 600mm BLIND FLANGE COVER.
9. 304L SS MAY BE SUBSTITUTED WITH DUAL GRADE 304/304L SS.
10. FABRICATOR TO PROVIDE PIPE SUPPORT PADS.
11. 160 Km/h PER URUGUAYAN NORMATIVES: UNIT 50–84.

1. NOTICE: The process design and other information contained on this drawing is the confidential property of KATZEN INTERNATIONAL, INC. and is protected by confidentiality agreement, copyright law, and trade secret law, and may not be used, reproduced, discussed with, or disclosed to, any unauthorized persons or organizations in any manner or for any purpose, without prior written approval by an authorized representative of KATZEN INTERNATIONAL, INC.

2. KATZEN INTERNATIONAL, INC. is authorized to practice engineering in the state of Ohio, USA. All code requirements shall be reviewed by a person or persons licensed to practice engineering in the applicable jurisdiction, unless stipulated otherwise.

Rev.	Date	Description	Dwn By	Ckd By	Appd By
0	1/31/13	REV. 0 ISSUE	WVLB	BG	BG

Origin: NJK

ALCOHOLES DEL URUGUAY S.A.
PAYSANDÚ, URUGUAY

UTE ABENER TEYMA PAYSANDÚ

KATZEN INTERNATIONAL, INC.
TECHNOLOGY • ENGINEERING CINCINNATI, OHIO, U.S.A.

Scale: NONE
211,200 LITERS/DAY MOTOR FUEL GRADE ETHANOL PLANT
EQUIPMENT SPECIFICATION
ITEM: TK-307 LIQUEFACTION TANK

Nº Plano: 0003-PLN-KAT-62-03-0202
Sheets: 1 Sheet Nº: 1
Client Nº: 1132-01 Dwg Nº: 03-202